Part Number Coding
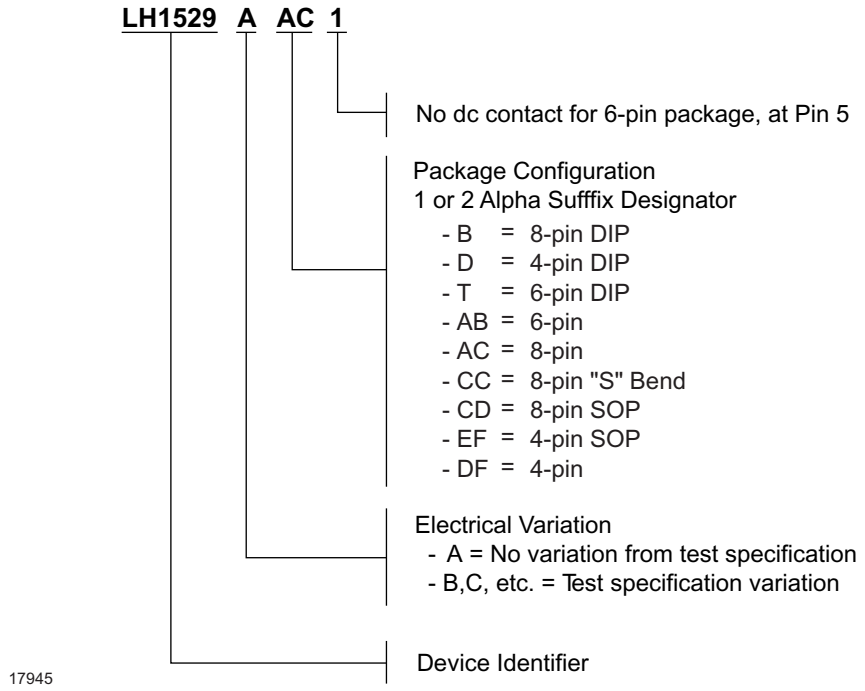
Coding Scheme